www.BobsPlans.com

Redwood Planter Box

Plans & Instructions

Wooden planters add an element of natural beauty to your patio or landscape. It will compliment your wooden patio furniture like Adirondack chairs and wooden picnic tables in a way that plastic can never do.

The planter shown above is made of solid redwood with a dark red stain. Teak, cedar, cypress, mahogany, or other decay resistant woods would be excellent choices for this wood planter too.

Copyright© 2005 by Robert E. Reedy
All rights reserved

Planter Box Plans

Materials List

Page 1

20	Side Panels	10”	3 1/2”	Cedar or other decay resistant wood
2	Long Top Pieces	23 1/2”	2”	Cedar or other decay resistant wood
2	Short Top Pieces	18”	2”	Cedar or other decay resistant wood
4	Long Trim Pieces	19 1/2”	1 1/2”	Cedar or other decay resistant wood
4	Short Trim Pieces	14”	1 1/2”	Cedar or other decay resistant wood
4	Wide Leg Section	12 1/2”	1 1/2”	Cedar or other decay resistant wood
4	Narrow Leg Section	12 1/2”	3/4”	Cedar or other decay resistant wood
2	Floor Support	19 1/2”	3/4”	Cedar or other decay resistant wood
4	Wide Bottom Board	13 7/8”	3 1/4”	Cedar or other decay resistant wood
2	Narrow Bottom Board	13 7/8”	1 1/2”	Cedar or other decay resistant wood

What You'll Need

5	96” By 3 1/2” Boards
1	72” BY 1 1/2” Board
A Small Box	1 1/4” Long Finishing Nails
A Few	1 1/2” Long Finishing Nails
A Dozen	1 1/2” Flat Head Wood Screws

Copyright © 2013 By Robert E Reedy
All Rights Reserved

Planter Box Plans

Parts Drawings & Dimensions

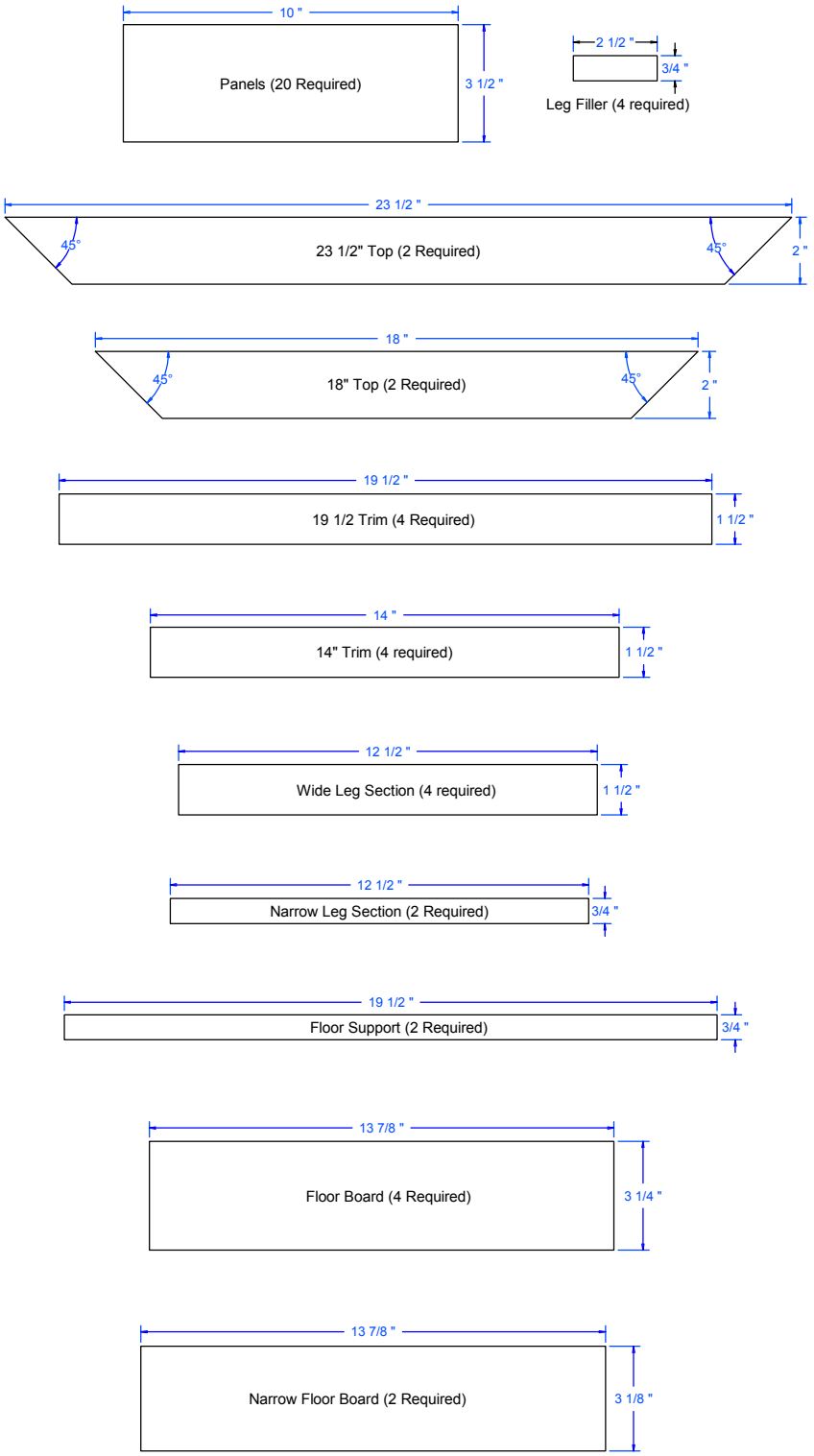

Copyright (c) 2013 By Robert E. Reedy
Vandalia, OH

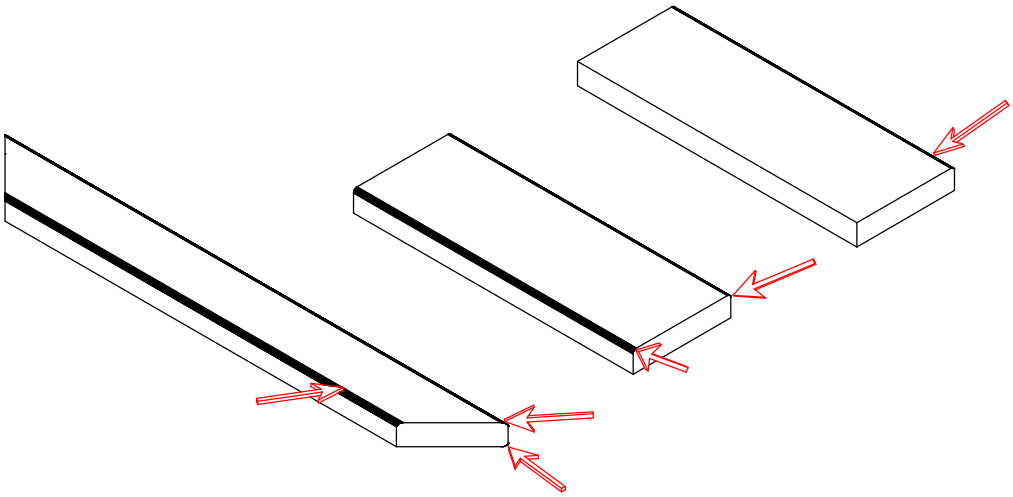

Select of eight panels and as indicated by the red arrows, round over one edge using a 1/8" diameter router bit . These will be used as end panels and the unrounded edges will be covered with trim.

Next round over two edges of the twelve remaining panels and as indicated by the red arrows. These will be used as inner panels.

Finally, round over both top edges and the outer bottom edge of the Top Pieces.

Note: The inner bottom edges of the Top Pieces should not be rounded over.

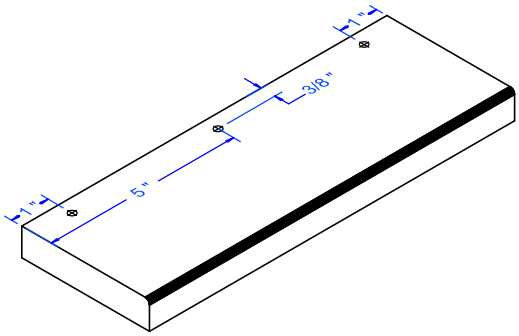

Drill and counter sink three 3/16" holes in four End Panel pieces as indicated in the drawing to the right.

Note: The holes are on the opposite side from the rounded over edges.

Copyright (c) 2013 By Robert E. Reedy
Vandalia, OH

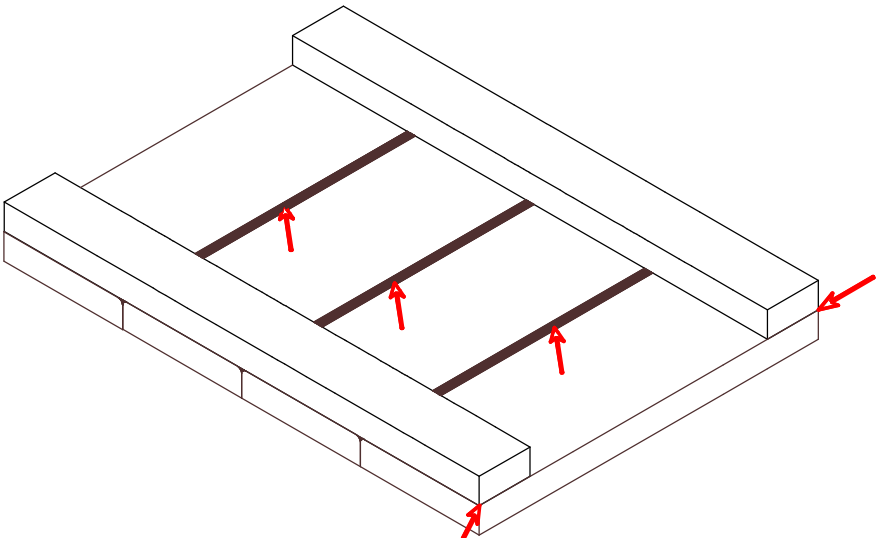

The drawing above illustrates the positioning of the four Panels and two 14"Horizontal Trim Pieces that make up the ends of the wood planter. Use panels with only one edge rounded over on the ends and panels with two rounded over edges in the middle as indicated by the three red arrows.

Be sure the rounded over edges of the panels are on the same side as the trim pieces. The trim pieces must be flush with the tops, bottoms, and corners of the panels as indicated by the two red arrows.

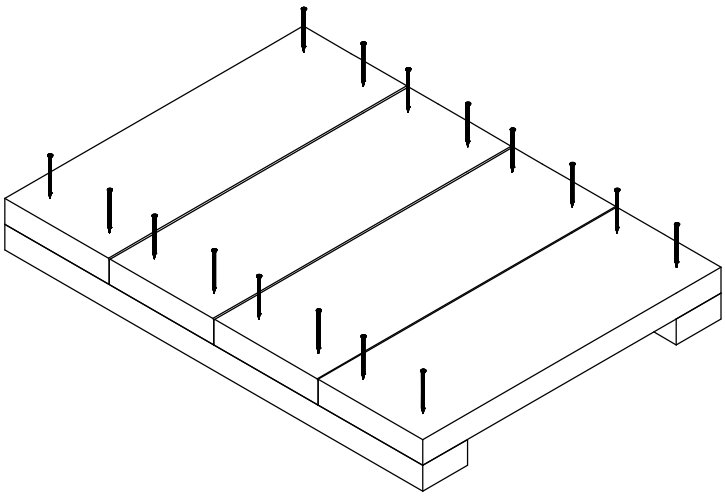

Apply glue to mating surfaces and keeping everything in the correct alignment, attach the panels and trim pieces with 1 1/4" finishing nails from the back side as shown in the drawing to the right.

Make sure the assembled parts are square!

Copyright (c) 2013 By Robert E. Reedy
Vandalia, OH

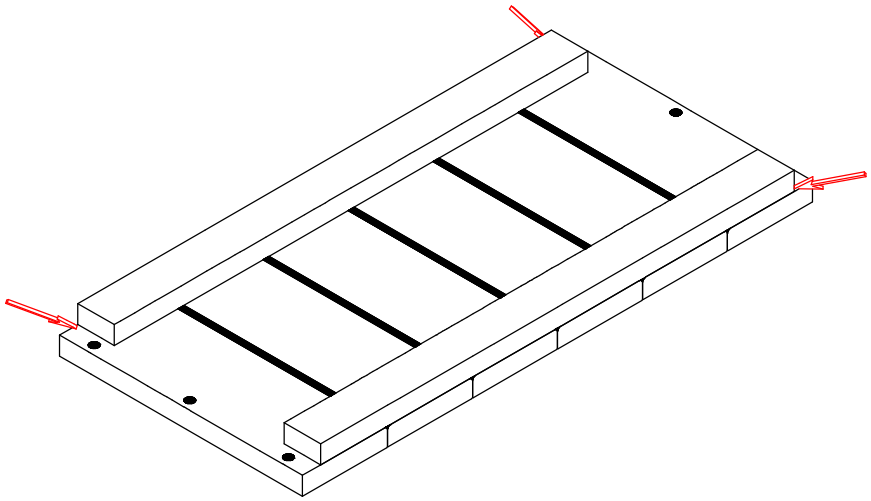

The drawing above illustrates the positioning of the six Panels and two 19 1/2" Horizontal Trim Pieces that make up the sides of the wood planter. As in the previous step, use panels with only one edge rounded over on the ends.

Again, be sure the rounded over edges of the panels are on the same side as the trim pieces. The trim pieces must be centered side to side and flush with the tops and bottoms of the panels as indicated by the red arrows.

This will leave a 3/4" space between the ends of the Trim Pieces and the edges of the panels.

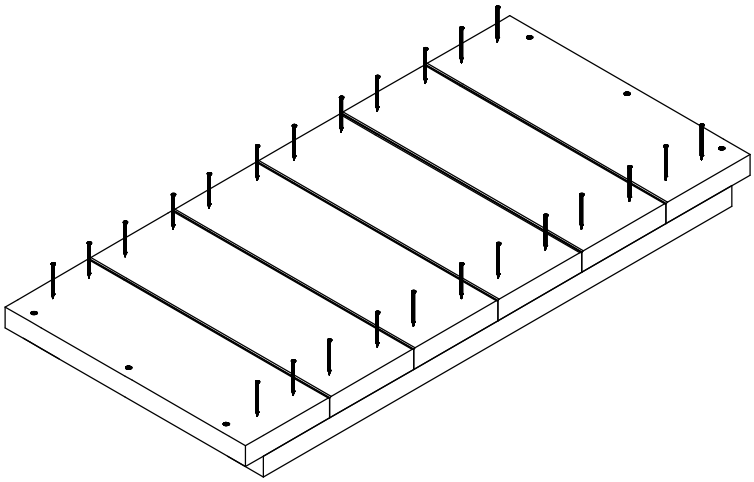

Apply glue to mating surfaces and keeping everything in the correct alignment, attach the panels and trim pieces with 1 1/4" finishing nails from the back side as shown in the drawing to the right.

Make sure the assembled parts are square!

Copyright (c) 2013 By Robert E. Reedy
Vandalia, OH

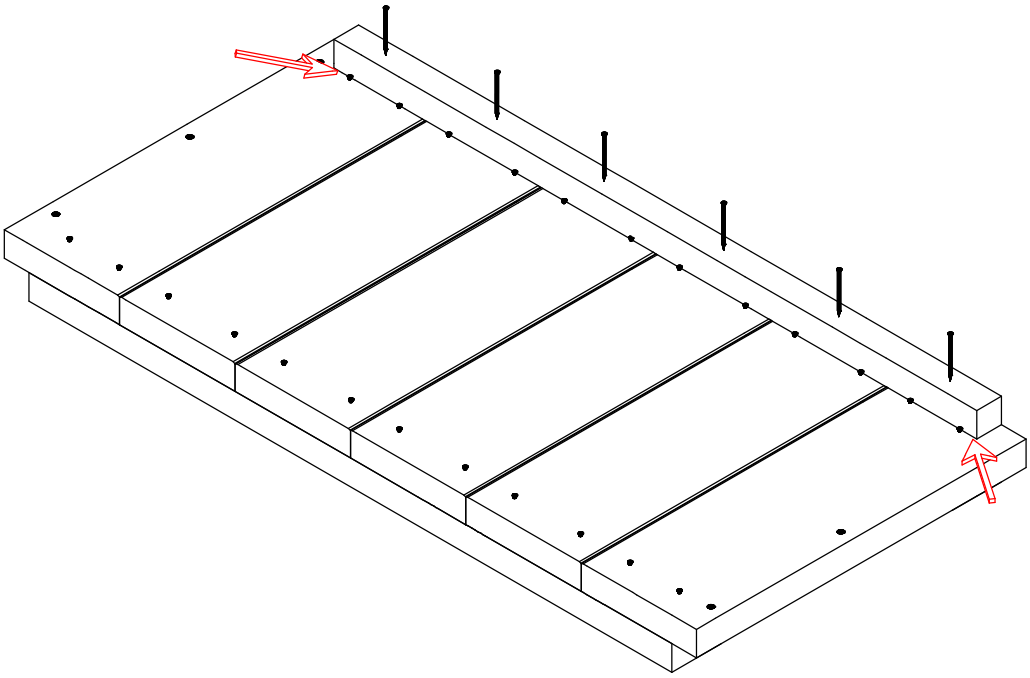

Attach a Floor Support to the bottom inside surface of each side with 1 1/4" finishing nails. The Floor Supports should be centered side to side and flush with the bottom of the panels.

Note: Your wood planter does not need floor supports for the End Assemblies.

Copyright (c) 2013 By Robert E. Reedy
Vandalia, OH

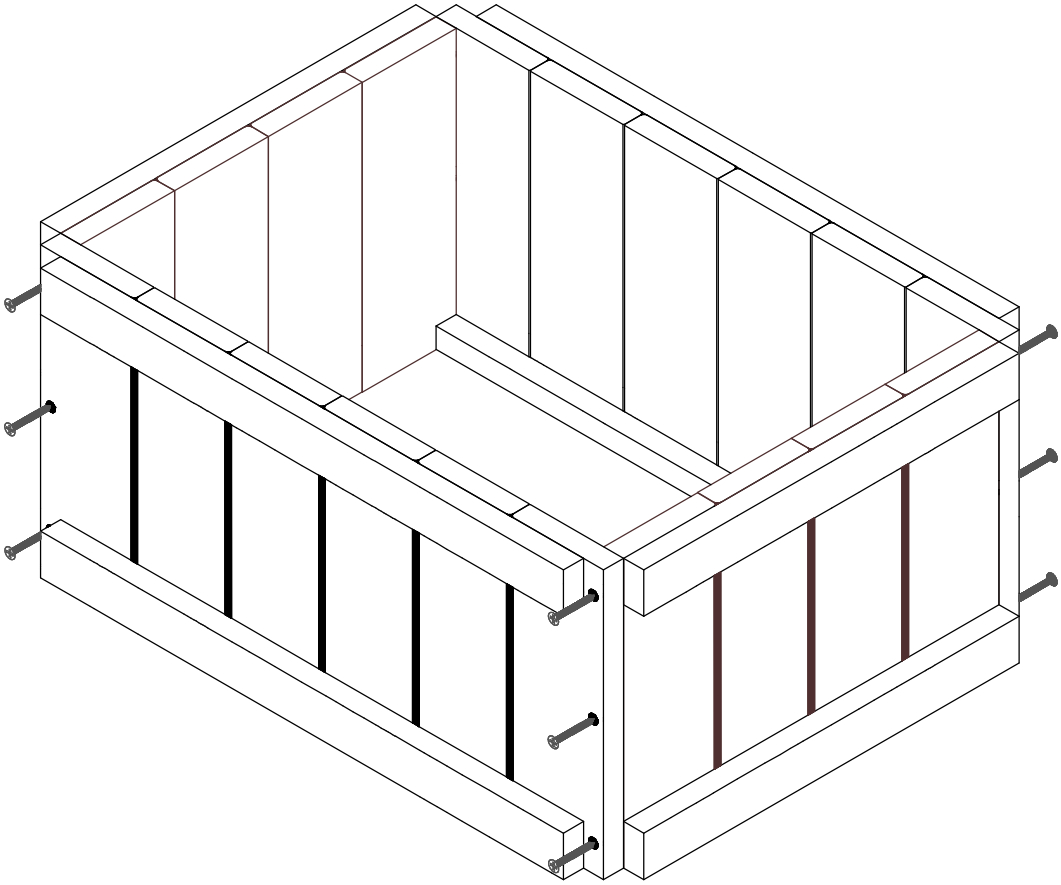

Apply glue to mating surfaces and assemble the sides and ends with 1 1/2" flat head wood screws as shown in the drawings above.

Copyright (c) 2013 By Robert E. Reedy
Vandalia, OH

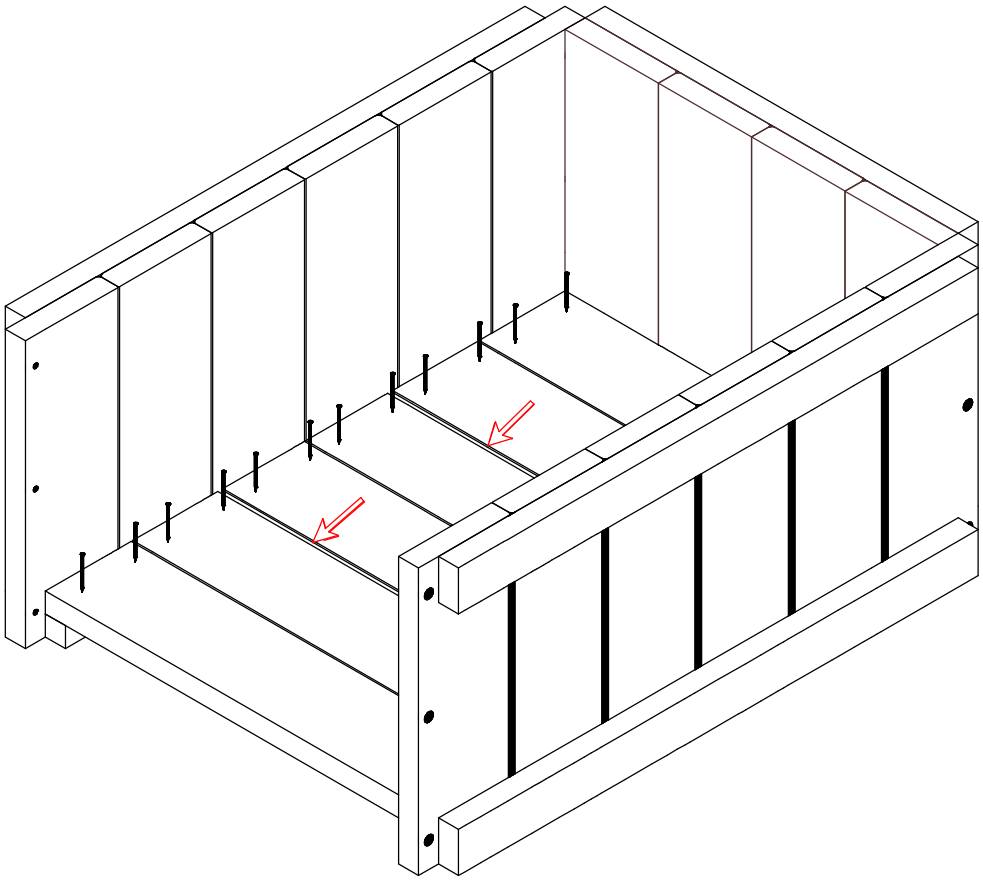

Attach the bottom boards with 1 1/4" finishing nails as shown in the drawing above. Note, glue is not required for this step and the end has been removed for clarity). The lengths of the bottom boards are a little shorter than the inside opening. They should be centered side to side.

Two of the boards are 1/8" narrower than the others. The two narrow boards should be in the center and positioned so there are two 1/8" gaps as shown by the arrows. These gaps allow for drainage in your wood planter.

Copyright (c) 2013 By Robert E. Reedy
Vandalia, OH

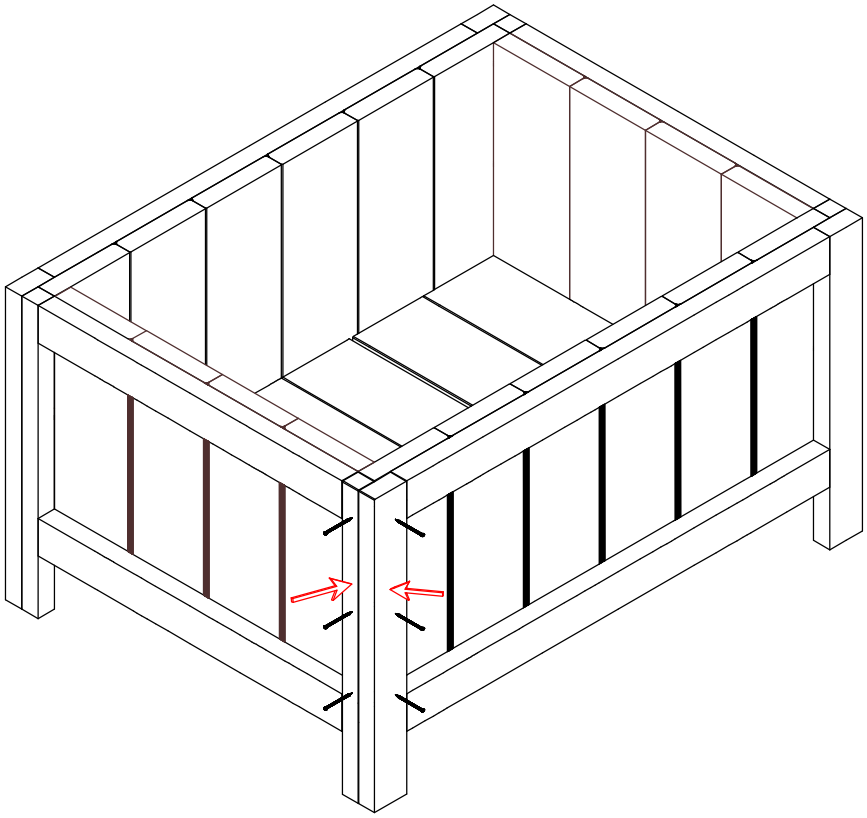

Apply glue to mating surfaces and attach the legs with 1 1/4" finishing nails as shown in the drawing above. The wide leg sections go on the sides and the narrow leg sections go on the ends of the wood planter.

Copyright (c) 2013 By Robert E. Reedy
Vandalia, OH

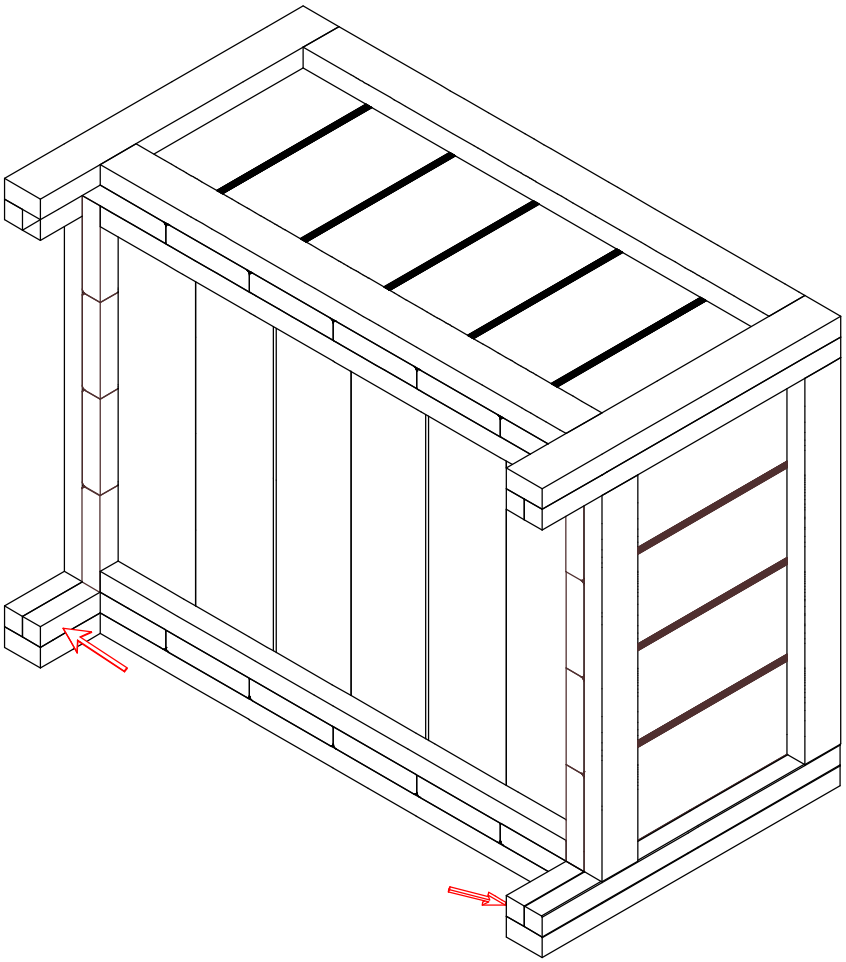

Apply glue to mating surfaces and attach the leg fillers with 1 1/4" finishing nails as indicated by the red arrows in the drawing above.

Note: For pieces this small, you should pre-drill the holes with a bit slightly smaller in diameter than the nails.

Copyright (c) 2013 By Robert E. Reedy
Vandalia, OH

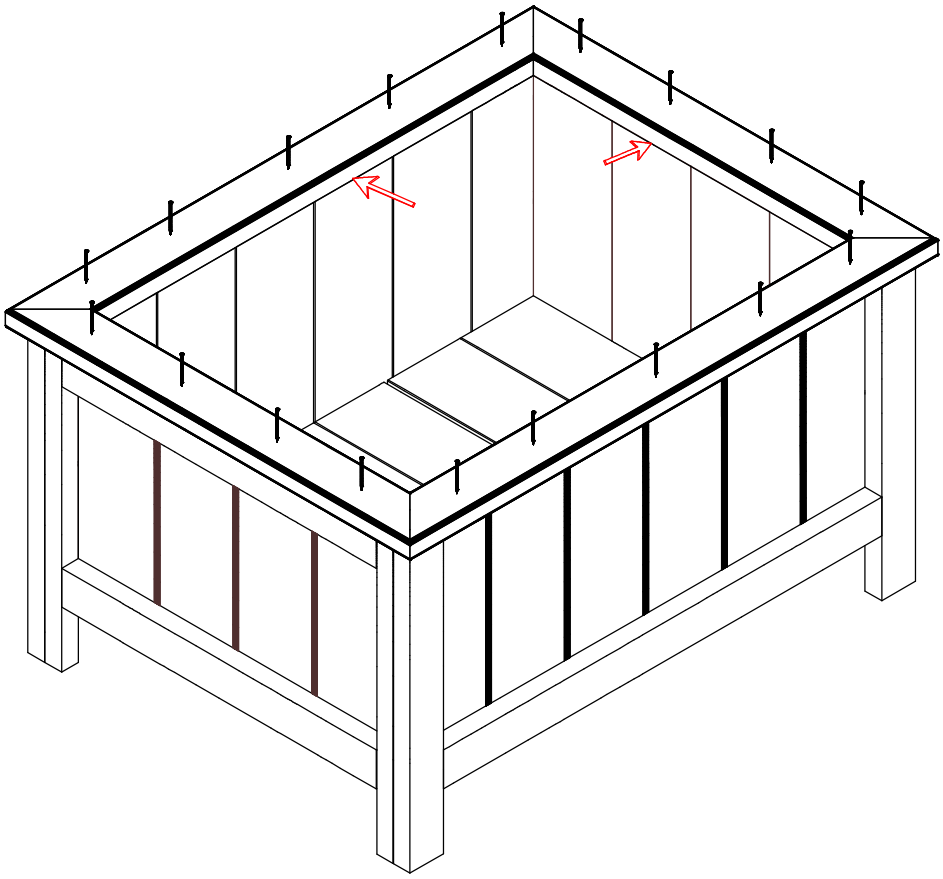

Apply glue to mating surfaces and attach the Top Pieces with 1 1/2" finishing nails as indicated in the drawing above. The inner edges of the Top Pieces should be flush with the inner surfaces of the walls as indicated by the red arrows.

Note: You can use longer nails here nails because there is no concern for the points of the nails protruding past a surface.

Copyright (c) 2013 By Robert E. Reedy
Vandalia, OH

Planter Box Plans

Cutouts

You'll need:

Five 96" by 3 1/2" Boards
One 72" by 1 1/2" Board
A Box of 1 1/4" Long Finishing Nails
A Few 1 1/2" Long Finishing Nails
A Dozen 1 1/2" Flathead Wood Screws

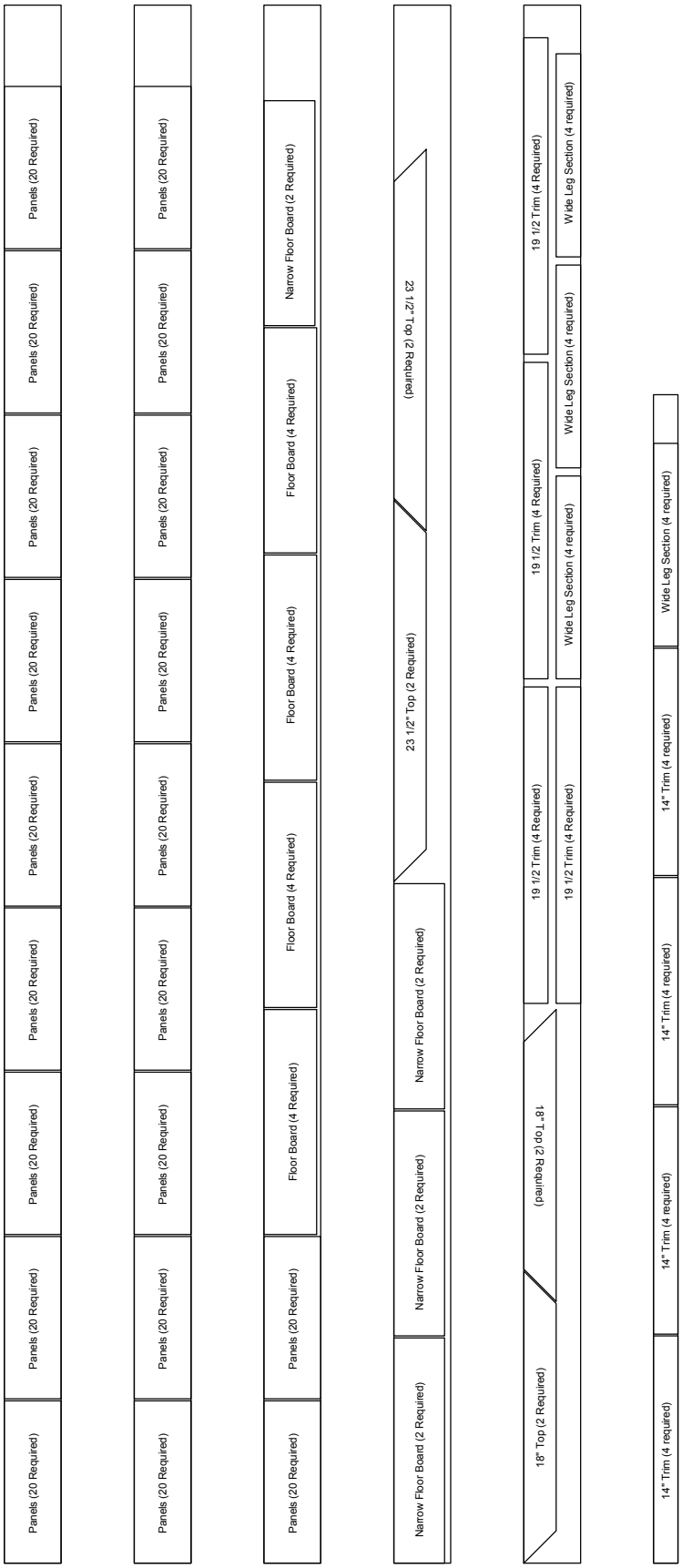

Copyright (c) 2013 By Robert E. Reedy
Vandalia, OH

More Plans from: www.bobsplans.com

Router Table

Workbench

Dog House

Picnic Table

Octagon Table

6 Foot Bar

Corner Desk

Book Case

Mantel Clock

Redwood Planter

Wheelbarrow

Spoke Wheel

Panel Saw

Trellis

Wheelbarrow

Pocket Hole Jig

Tenoning Jig

Table Saw Sled

Drill Press Table